Velora Folding Pilates Reformer

INSTRUCTION MANUAL



Product may differ from manual due to product upgrades. Some parts may come pre-installed

FOR DOMESTIC INDOOR USE ONLY

WARNING: Keep young children away from this product at all times.

TABLE OF CONTENTS

I. Important Safety Instructions.....

II. Parts List.....

III. Assembly Instructions.....

IV. Exercise Guide.....

V. Warranty.....

1. CAUTION

- Using Pilates equipment the right way can help you perform a variety of exercises safely and effectively. However, it’s important to be mindful and take care, especially when working with spring resistance, as any exercise equipment comes with its own set of risks.
- Before starting any exercise you should consult your doctor to determine if you have any physical or health conditions that could create a risk to your health and safety, or prevent you from using the equipment properly. Your doctor’s advice is essential if you are taking medication that affects your heart rate, blood pressure, or cholesterol level.
- If you're new to this equipment or trying it for the first time, we highly recommend having a qualified professional guide you. It’s also essential to make sure all users have received sufficient instructions on how to use the product safely.
- Please stop immediately if you feel unwell.

Equipment Safety:

- Position the equipment on a stable, level surface to ensure safe and effective use.
- Maintain a minimum clearance of 1 meter on either side of the Reformer for optimal functionality and ease of movement.
- Assemble the equipment in accordance with the manufacturer’s instructions, confirming that all components are securely fastened before use.
- Conduct regular inspections of the equipment to identify any loose, worn, or damaged parts. Discontinue use immediately if any issues are detected.
- Exercise caution when folding, unfolding, or adjusting the carriage to avoid injury, particularly to fingers and hands.

2. PARTS LIST



2 x Risers & 2 x Pins

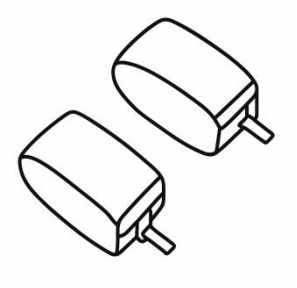

2 x Shoulder Rest Blocks

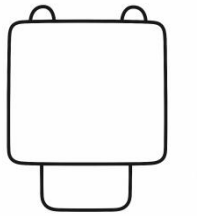

1 x Jump Board

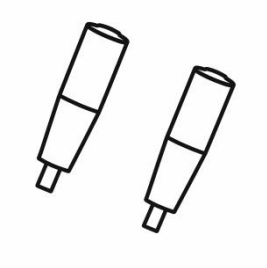

2 x Handles

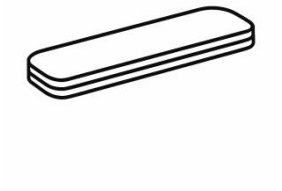

1 x Foot Platform



1 x Box

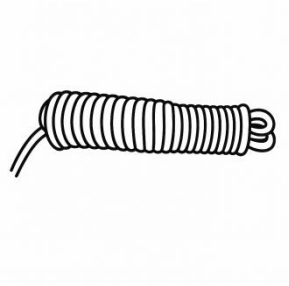

1 x Rope



2 x Feet/Handle Straps

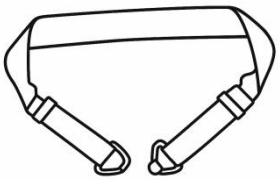

1 x Foot Strap

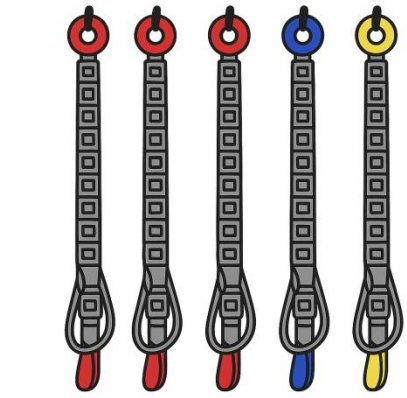

Springs: 3 x Red, 1 x Blue, 1 x Yellow

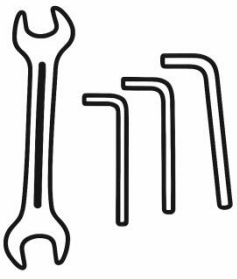

Tools

3. PRODUCT ASSEMBLY

Unpacking the carton

Gently take all parts out of the packaging and make sure you have enough clear space to complete the assembly.

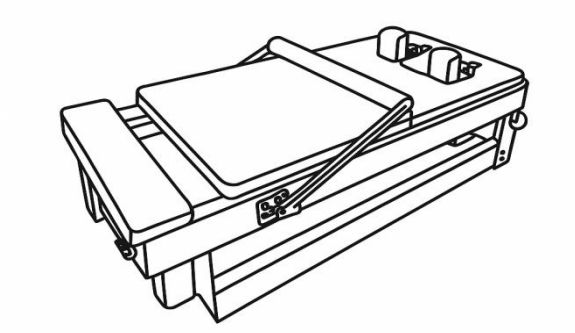

Warning

- Since no springs are connected, the carriage isn't secured and may roll. Use extra caution when handling the unit.
  Lifting the frame from the box may require two people.

Installing Springs

Colour:	Red	Blue	Yellow
Resistance:	Heavy	Medium	Light

- As shown in the image below, red springs are attached to the spring pins at positions 1, 3, and 5 from the left. The blue and yellow springs are placed in the gaps between the red springs.
- Place the springs on the gear bar to set your preferred resistance level

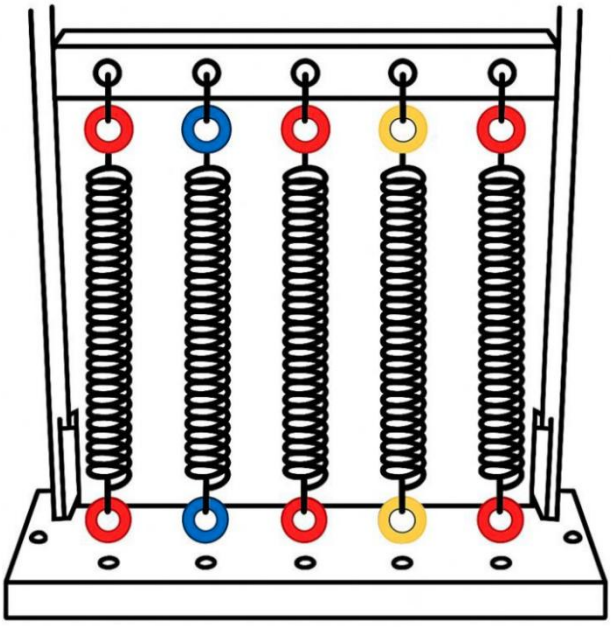

Warning

For your safety you must ensure that at least one spring is installed at all times.

Bracket Stop Assembly

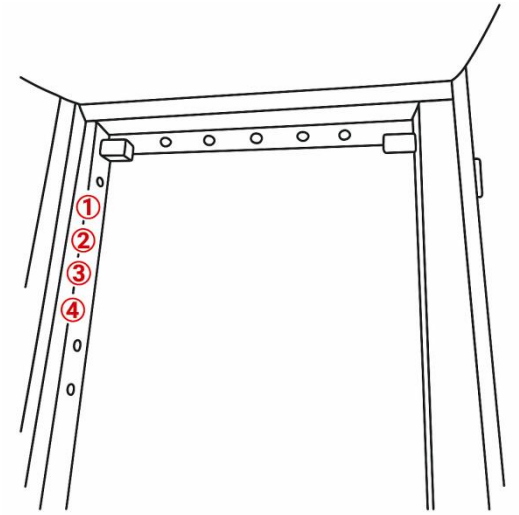

- When opening the bed body, it will rest in positions 1, 2, 3, or 4, depending on your height.
- Ensure the carrier operating table remains inside the bed frame and in a stationary state. Taller users may find it necessary to position the stopper further away from the floor bar and spring pin.

Handle and Shoulder Rest Blocks

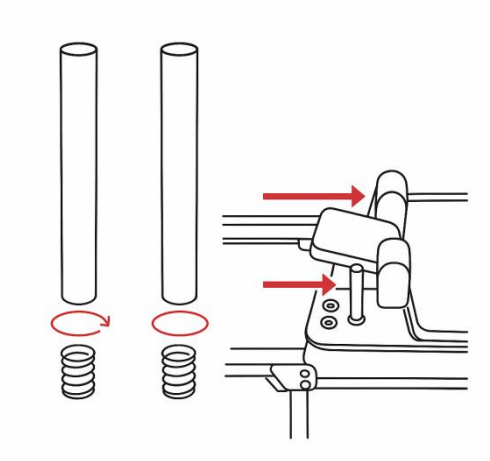

ASSEMBLE THE HANDLE AND THE SHOULDER REST BLOCKS

1. Unscrew the pre-installed bolt on the Handle. Line up the hole on the frame to the Handle and tighten underneath with the bolt. Repeat for the other side (Shown above).

Shoulder pillow:

① As shown in the picture, install the shoulder support pad behind the handle. First, remove the pre-installed washers and nuts on the pad. The position of the shoulder rest can be wide or narrow depending on the orientation of the shoulder rest block. Select the desired shoulder block location and insert the pin into the hole. Make sure the cross lock is securely in place.

②The washers and bolts are located under the bracket. Securely tighten the shoulder bolster support bolts of both shoulder bolster support blocks from underneath the bracket.

ASSEMBLE THE ROPES AND THE RISERS

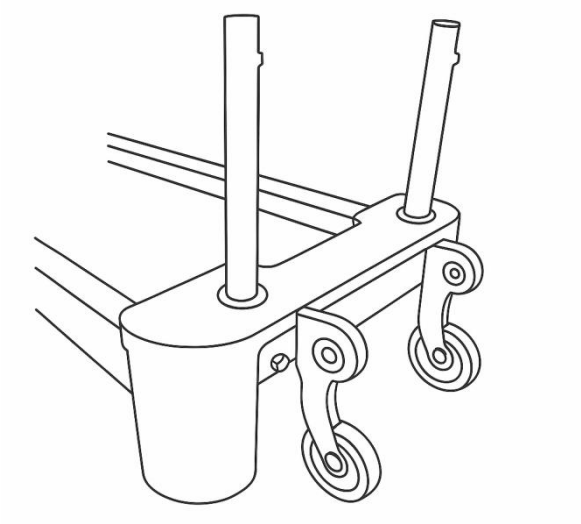

Insert the pulley riser into the appropriate plastic bracket. Push the pulley lifter down, making sure the internal threads are visible through the frame. Insert the threaded tightening knob into the preferred height of the three holes and tighten the knob to hold the pulley riser in place.

1：Tie the handle band to the loop end of the rope to form a knot that interlocks. Repeat with the other rope, then tie the handle to the shoulder strap.

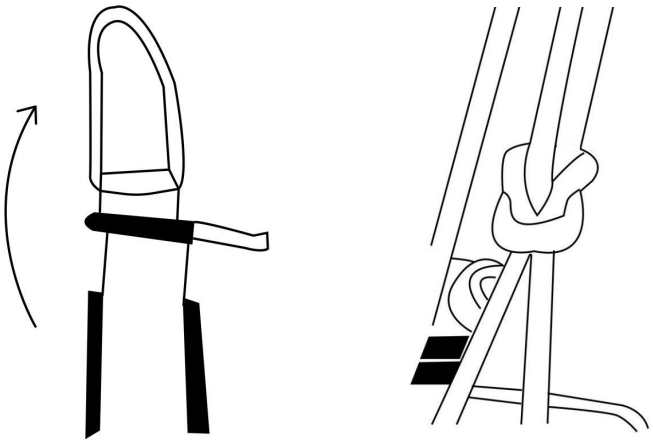

2：Feed the other end of the rope through the pulley on the pulley lifter.

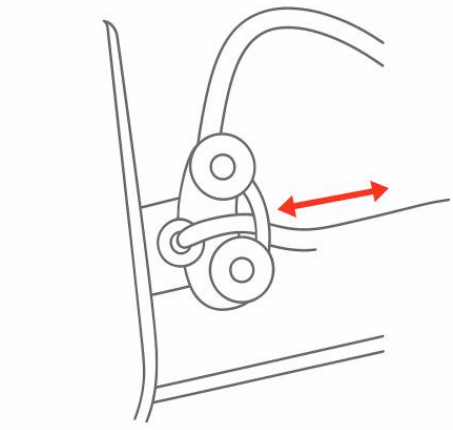

3：Insert the loose end into the rope clip on the car to your preferred length and according to the exercise you are performing.

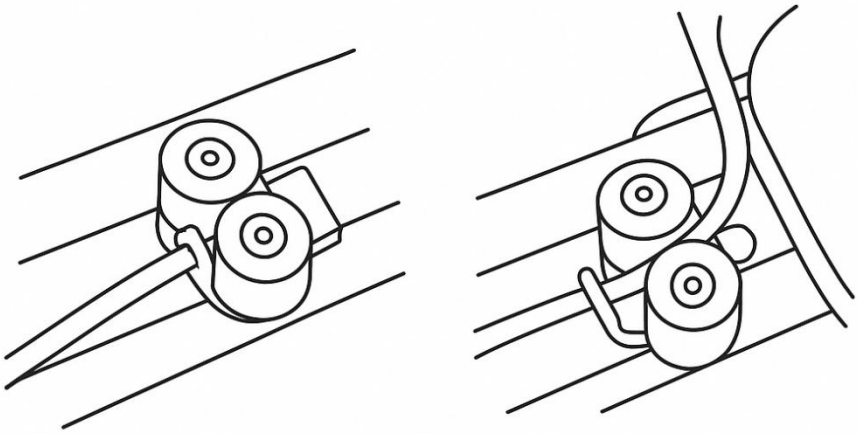

Note: Longer ropes create less tension, shorter ropes create more tension. For excess rope, tie a bundle of rope neatly together and wrap around the jig as below

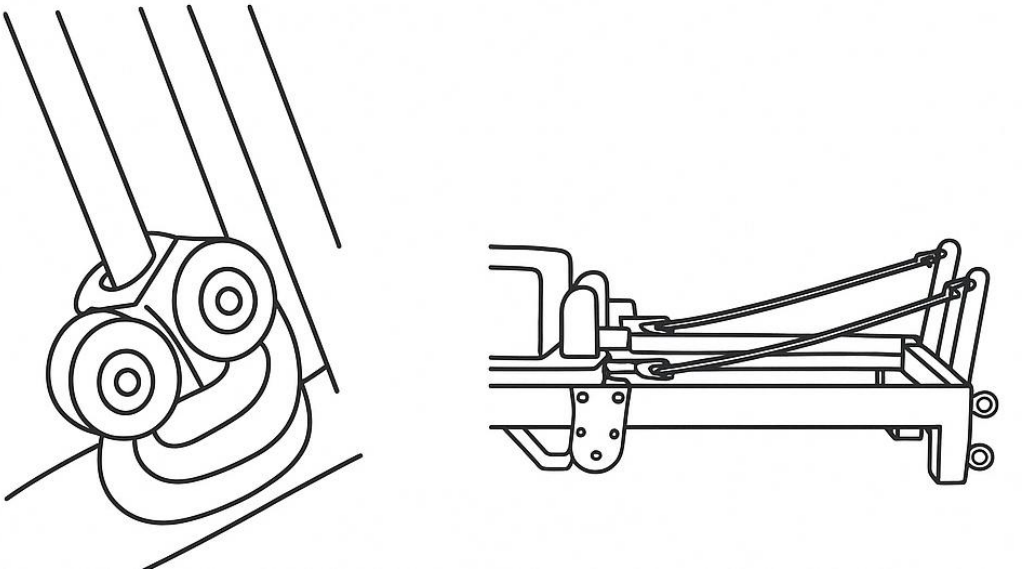

Esure the rope is of equal length and properly secured. You can ensure that they are equal by placing them on the shoulder holder block and pulling the rope to the desired length

ASSEMBLE FOOT STRAP ACCESSORIES

The belt accessories are attached according to the picture to ensure that they are completely tightened

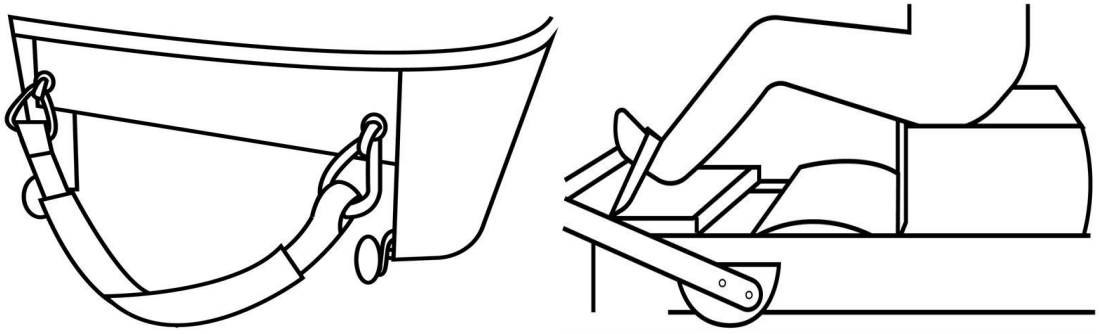

ADJUSTING THE FOOT BAR

1：Lift up the Foot bar up and slot to preferred angle

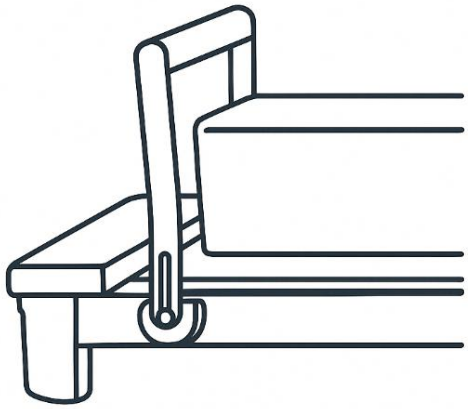

WARNING: Ensure that the rod of the foot bar support bar is fully engaged in both of its positioning slots (left and right sides) before beginning any exercise. Failure to do so can result in serious injury.

USING THE JUMP BOARD

①: Lift and take out the foot platform and remove it. Move the footrest to a lower position to make room for the springboard.

②: Insert the springboard into the plastic bracket on the frame, then fully raise the foot lever and set it to create pressure on the back of the springboard pole to secure it in place.

③: Insert the tightening knob and tighten the jumper plate rod to fix the jumper plate in place.

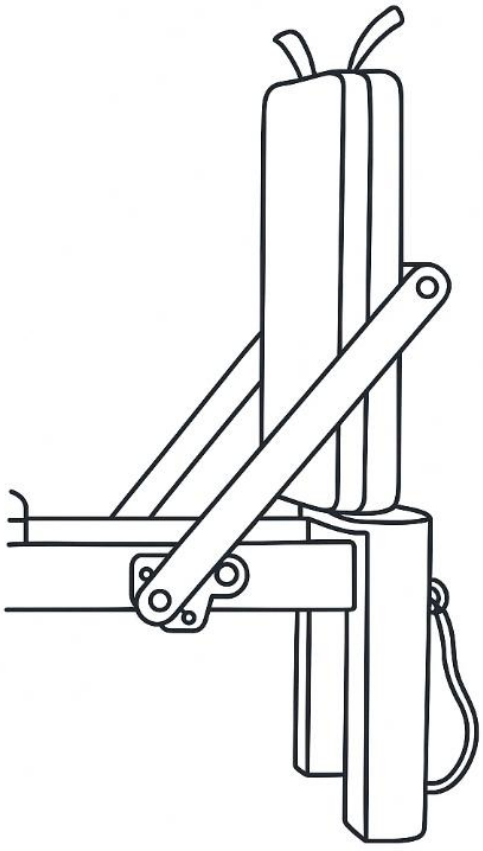

Seat box setup
Place the seat box vertically or horizontally under the shoulder pillow of the carriage for your favorite position.

Storage
①: Re-move the pulley upright from the frame.
② Move the carriage stop to position F.
③: Hook at least one spring onto the pulley to prevent it from sliding when folding.
④: There is a handle in the middle of the bed frame, grab the handle and start pulling the bed up until the wheels touch the ground and the bed stands upright.
Note: It is easier to lift the handle when you are inside the bed frame, then walk out of the bed frame as you start to lift it

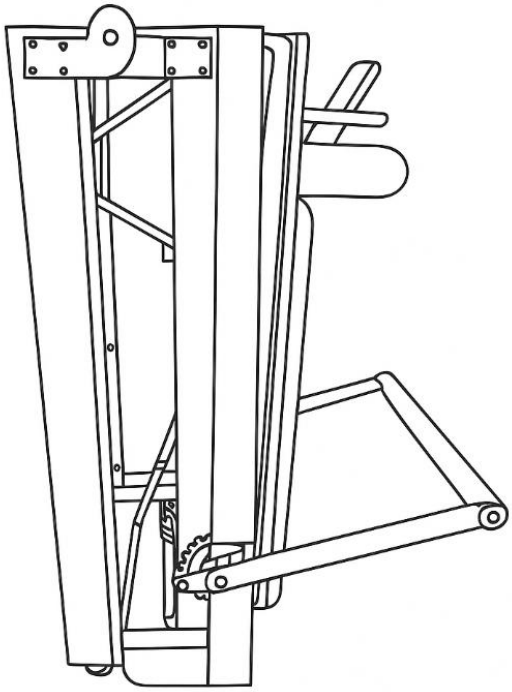

MOVING THE REFORMER
FOLDED: To move the Reformer when it is folded, simply tilt it onto the transportation wheels below and move it to your desired location.

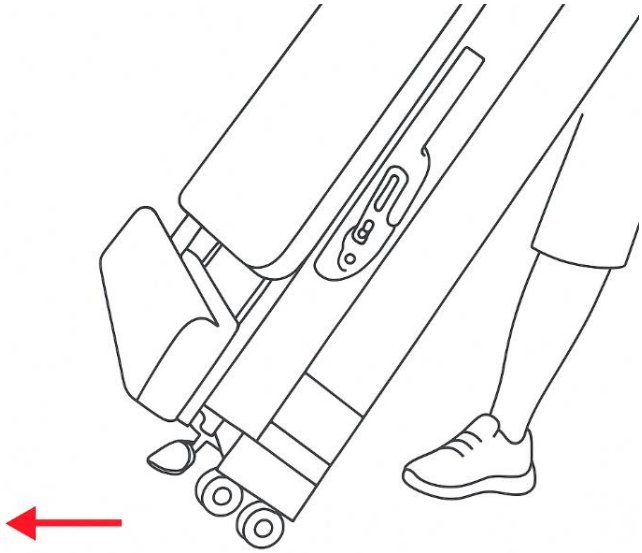

EXERCISE GUIDE

Before beginning any exercise program, consult your physician. This is important especially if you are over the age of 45 or for individuals with pre-existing health problems.

Exercising is great way to control your weight, improving your fitness and reduce the effect of aging and stress. The key to success is to make exercise a regular and enjoyable part of your everyday life.

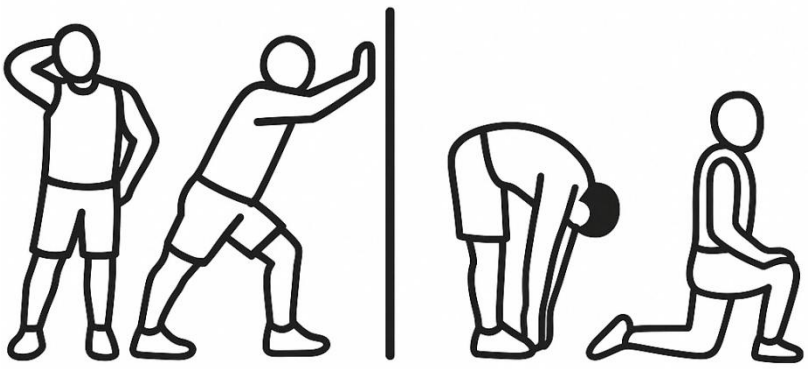

WARM UP

Start each workout with 5 to 10 minutes of stretching and some light exercises. A proper warm-up increases your body temperature, heart rate and circulation in preparation for exercise. Ease into your exercise.

After warming up, increase the intensity to your desired exercise program. Be sure to maintain your intensity for maximum performance. Breathe regularly and deeply as you exercise.

COOL DOWN

Finish each workout with a light jog or walk for at least 1 minute. Then complete 5 to 10 minutes of stretching to cool down. This will increase the flexibility of your muscles and will help prevent post-exercise problems.

Warranty and Contact Details

Kmate Pty Ltd provides a 12 month warranty for this product when used for domestic purposes. Commercial use of the product will void all warranty.
The benefits of this warranty are provided in addition to other rights and remedies you may have under a law in relation to the goods and services to which this warranty relates. Our goods come with guarantees that cannot be excluded under the Australian Consumer Law. You are entitled to a replacement or refund for a major failure and for compensation for any other reasonably foreseeable loss or damage. You are also entitled to have goods repaired or replaced if the goods fail to be of acceptable quality and the failure does not amount to a major failure.
Before making a claim under warranty, please refer to your user/installation manual to ensure that you have followed correct operating procedures of your product, and refer to the trouble shooting section (if such exists) to assist solving any problems.
The warranty period begins from the day of purchase.
Your proof of purchase must be produced before assistance will be provided.

Where the Product is replaced pursuant to this Warranty, the replacement Product will be subject to the warranty terms and warranty commencement date of the original product.
This warranty is only valid if the product is operated and maintained in accordance with the manufacturer's instructions.

Damage to property including but not limited to furniture, carpets, walls, ceilings or any other event either directly or indirectly are excluded from warranty as well as any losses or expenses incurred by you in relation to the product or making a claim under this warranty including without limitation any costs associated with installation, reinstallation or transporting the product.

A claim may be refused if the defective claim has arisen for reasons other than a manufacturers fault or defective parts or workmanship. Circumstances in which a warranty claim may be declined include, but are not limited to the following:

- Normal wear and tear;
- Misuse or abuse, including failure to properly maintain or service;
- Damages caused by improper or incorrect installation, force-majeure, water etc are not eligible for warranty repair;
- Insect or vermin infestation;
- Failure to clean or improper cleaning and/or operation of the product;
- If the product is modified without authorisation from Kmate Pty Ltd in writing;

Warranty Contact Details Powertrain Sports (Australia)
PO Box 133, Braeside VIC 3195 warranty@powertrain.com.au 03 9790 0055

The latest version of this manual is available for download at:
https://kmate.com.au/pr2